native spirit

NS711

Men's linen bermuda shorts



About

- Sustainable, thermoregulating and lightweight fabric.
- No label for limitless customisation.
- Fashionable and hard-wearing.

100% linen. Woven. Waistband with loops and inner waistband finish with contrasting Navy Blue French seam. Fly with recycled plastic marble-effect buttons and recycled metal zip. Two front pockets with overstitching. Two piped pockets on the back with recycled plastic marble-effect buttons. Front and back pocket background in tone-on-tone herringbone. Rib stitching on the front and back for added reinforcement. Single overstitching on the leg hem. Garment washed after assembly: colours may vary from item to item.

210 g/m²

Sizes

More information

Logistic	Country of origin	Customs code
1 / 20	BD - Bangladesh	62034990

Colours

Certifications

NO LABEL · LINEN · 3 COLOURS

Maintenance

40

native spirit

NS711

Men’s linen bermuda shorts

Dimensions (cm)

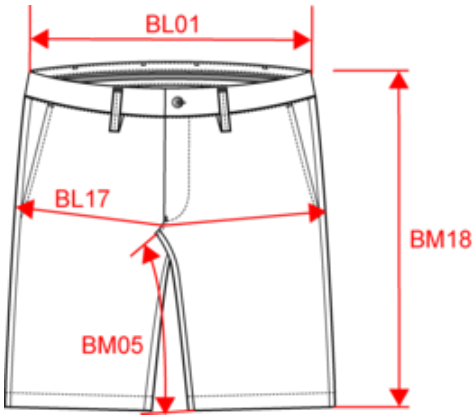

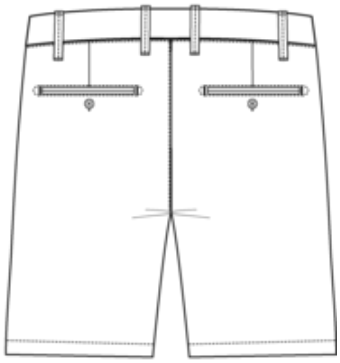

native spirit

NS711

Men’s linen bermuda shorts

Colours information

Logistic  1  20

Sizes	Width (cm)	Height (cm)	Length (cm)	Net weight (kg)	Gross weight (kg)	Pieces/Box	Pieces/Bundle