native spirit

NS709

Kids' linen bermuda shorts



About

- Sustainable, thermoregulating and lightweight fabric.
- No label for limitless customisation.
- Fashionable and hard-wearing.

100% linen. Woven. Waistband with loops, elasticated inner, adjustable. Inner waistband finish with contrasting Navy Blue French seam. Fly with recycled plastic marble-effect buttons and recycled metal zip. Two front pockets with overstitching. Two piped pockets on the back with recycled plastic marble-effect buttons. Front and back pocket background in tone-on-tone herringbone. Single overstitching on the leg hem. Rib stitching on the front and back for added reinforcement. Garment washed after assembly: colours may vary from item to item.

210 g/m²

Sizes

More information

Logistic		Country of origin	Customs code
1	20	BD - Bangladesh	62034990

Colours

Certifications

OEKO TEX® STANDARD 100 CQ 1007/8 IFTH www.oeko-tex.com

Maintenance

40

native spirit

NS709

Kids' linen bermuda shorts

Dimensions (cm)

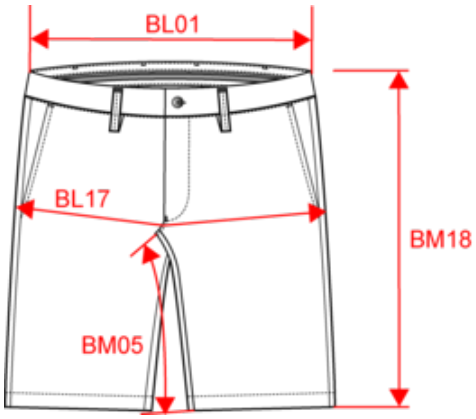

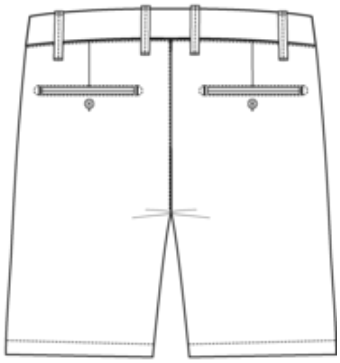

native spirit

NS709

Kids' linen bermuda shorts

Colours information

Logistic  1  20

Sizes	Width (cm)	Height (cm)	Length (cm)	Net weight (kg)	Gross weight (kg)	Pieces/Box	Pieces/Bundle