native spirit

NS106

Fleece duffel bag



About

• Made from responsible materials.

• LSF manufacture.

• No label: 100% customisable for your project.

Outside: 85 % organic cotton / 15 % post-consumer recycled polyester. Lining: 75 % organic cotton / 22 % post-consumer recycled polyester / 3 % other fibres. Capacity: 25L. Fleece material. Combed cotton. 3-ply LSF (Low Shrinkage Fleece: pre-shrunk fleece) fabric. Enzyme washed. Double zip fastening. Lined with inner zipped pocket and zip for decoration access in recycled nylon. Zip opening made of reinforced metal. Reinforced handles. Please note: the IVORY shade is very delicate. We advise that you wash your item at 30°C using a mild detergent, whilst following the care instructions.

350 g/m²

Sizes

One Size

More information

Logistic

1 30

Country of origin

BD - Bangladesh

Customs code

42029298

Colours

Almond Green, Black, Hibiscus Red, Iron Grey, Ivory, Mineral Grey, Navy Blue

Certifications

Maintenance



native spirit

NS106

Fleece duffel bag

Dimensions (cm)

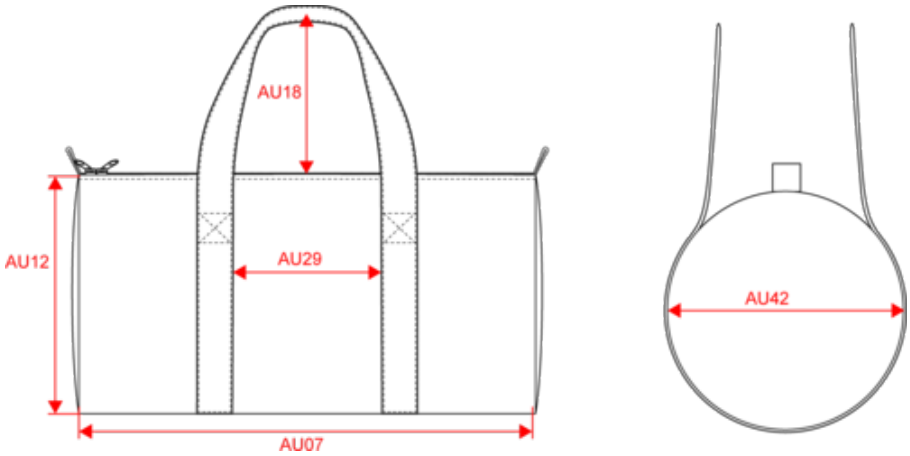

Measurements in cm	One Size
AU07 - Total width	50.00
AU12 - Total height	25.00
AU17 - Total depth	25.00
AU29 - Space between handle	23.50

native spirit

NS106
Fleece duffel bag

Colours information

Almond Green
RVB : 140,143,129
Pantone C : 416C
Pantone TCX : 16-6008TCX

Black
RVB : 35,35,37
Pantone C : Black
Pantone TCX : 19-4004TCX

Hibiscus Red
RVB : 134,27,47
Pantone C : 1815C
Pantone TCX : 19-1656TCX

Iron Grey
RVB : 78,80,82
Pantone C : 446C
Pantone TCX : 19-3901TCX

Ivory
RVB : 236,231,218
Pantone C : 7534C
Pantone TCX : 11-0701TCX

Mineral Grey
RVB : 94,104,116
Pantone C : 431C
Pantone TCX : 18-4215TCX

Navy Blue
RVB : 41,45,57
Pantone C : 433C
Pantone TCX : 19-4010TCX

Logistic

 1

 30

Sizes	Width (cm)	Height (cm)	Length (cm)	Net weight (kg)	Gross weight (kg)	Pieces/Box	Pieces/Bundle
One Size	40.00	40.00	60.00	14.1	16	30	1