KI0390

# Cooler bag with shoulder strap



100% polyester. 300D. Cooler bag featuring an adjustable contrasting shoulder strap, matching the webbing on the front pocket and the zip fastening with cord zip puller. Top handle. Unlined front pocket for easy decoration. Can hold 500 ml cans in an upright position.

One Size | 230 g/m² | 7 l

## Certifications

## More information

**Logistic**

1 | 30

**Country of origin**

CN - China

**Customs code**

42029298

**Maintenance**





Anchor Navy / White / Sweet Grey | Black / Caramel Brown / Bark Brown | Caramel Brown / Foliage Green / Ecru | Light Garnet / Navy / Ecru

KI0390

# Cooler bag with shoulder strap

**Dimensions (cm)**

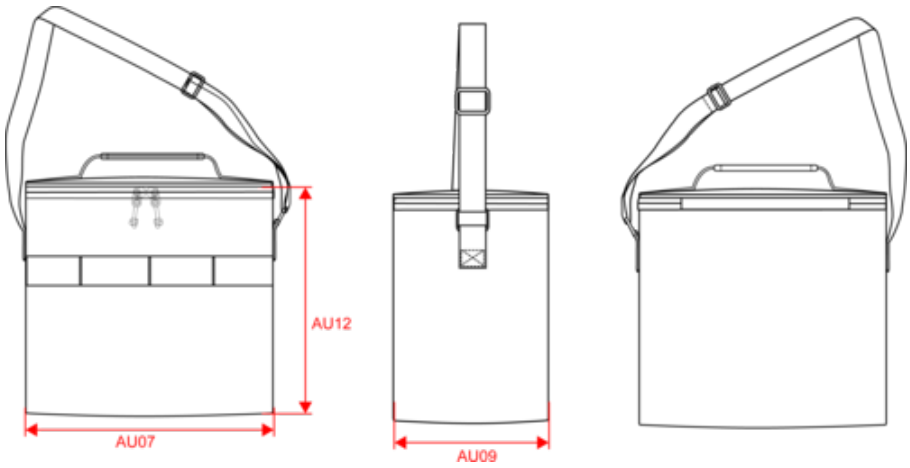


| Measurements in cm | One Size |
|---|---|
| AU07 - Total width | 22.00 |
| AU09 - Depth of bottom part | 14.50 |
| AU12 - Total height | 21.00 |

KI0390

# Cooler bag with shoulder strap

## Colours information



**Anchor Navy**
RVB :
Pantone C :
Pantone TCX :

**White**
RVB : 236,236,252
Pantone C : White
Pantone TCX : 11-0601TCX

**Sweet Grey**
RVB : 171,172,169
Pantone C : 414C
Pantone TCX : 16-4402tcx



**Black**
RVB : 35,35,37
Pantone C : Black
Pantone TCX : 19-4004TCX

**Caramel Brown**
RVB :
Pantone C :
Pantone TCX :

**Bark Brown**
RVB :
Pantone C :
Pantone TCX :



**Caramel Brown**
RVB :
Pantone C :
Pantone TCX :

**Foliage Green**
RVB :
Pantone C :
Pantone TCX :

**Ecru**
RVB :
Pantone C :
Pantone TCX :



**Light Garnet**
RVB :
Pantone C :
Pantone TCX :

**Navy**
RVB : 41,46,56
Pantone C : 433C
Pantone TCX : 19-4012TCX

**Ecru**
RVB :
Pantone C :
Pantone TCX :

**Logistic**  1  30

| Sizes | Width (cm) | Height (cm) | Length (cm) | Net weight (kg) | Gross weight (kg) | Pieces/Box | Pieces/Bundle |
|---|---|---|---|---|---|---|---|
| One Size | 37.00 | 40.00 | 69.00 | 7 | 8 | 30 | 1 |