KI0388

Large cooler bag



100% polyester. 600D. Large cooler bag with adjustable shoulder strap. Padded shoulder pad on the strap for added comfort. Suitcase-style top opening with handle. Large front pocket with contrast strip for easy branding. Cord zip puller. Elasticated side strap to hold the bag folded for easy storage.

One Size | 320 g/m² | 38 l

Certifications

More information

Logistic

1 | 5

Country of origin

CN - China

Customs code

42029298

Cool Green / Nordic Grey

Twilight Blue / Powder Grey

Maintenance

KI0388

Large cooler bag

Dimensions (cm)

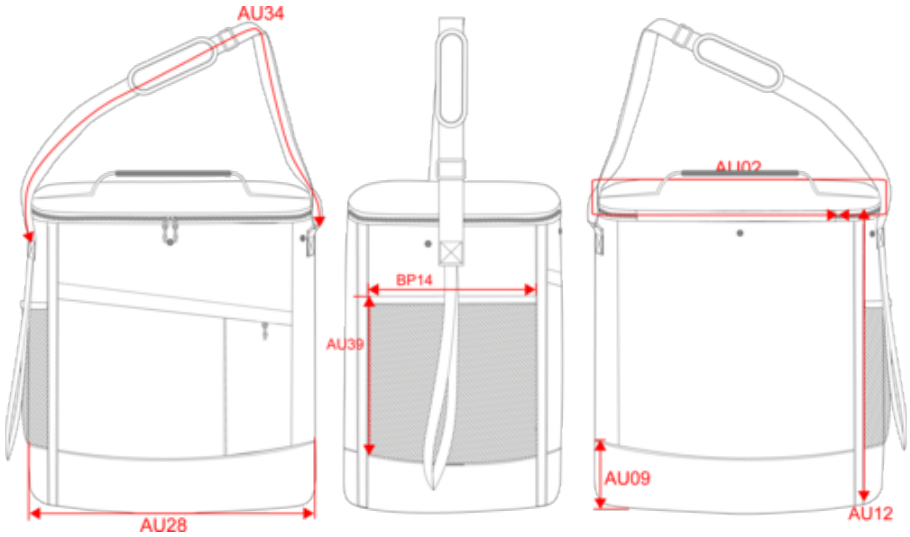

Measurements in cm	One Size
AU09 - Depth of bottom part	8.00
AU12 - Total height	37.00

KI0388

Large cooler bag

Colours information



Cool Green
RVB :
Pantone C :
Pantone TCX :

Nordic Grey
RVB :
Pantone C :
Pantone TCX :



Twilight Blue
RVB : 44,55,73
Pantone C : 7546C
Pantone TCX : 19-4024TCX

Powder Grey
RVB :
Pantone C :
Pantone TCX :

Logistic  1  5

Sizes	Width (cm)	Height (cm)	Length (cm)	Net weight (kg)	Gross weight (kg)	Pieces/Box	Pieces/Bundle
One Size	40.00	20.00	57.00	3	4	5	1