KI0385

Cooler bag with shoulder strap



100% polyester (Nomad Brown Heather). 65% polyester, 20% cotton, 10% viscose and 5% other fibres (Greige). Main fabric: 600D. Cooler bag with adjustable shoulder strap. Large enough to hold six 33 cl cans. Unlined front pocket for easy customisation.

One Size | 190 g/m² | 4,5 l

Certifications

More information

Logistic

1 | 60

Country of origin

CN - China

Customs code

42029298

Nomad Brown Heather / Greige

Maintenance

KI0385

Cooler bag with shoulder strap

Dimensions (cm)

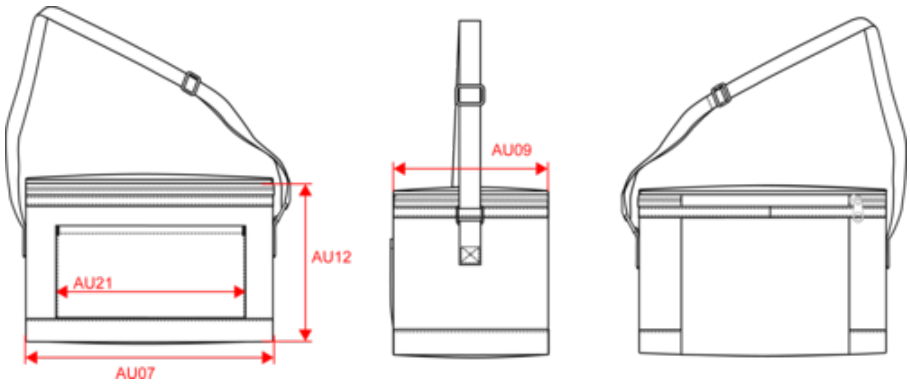

Measurements in cm	One Size
AU07 - Total width	21.00
AU09 - Depth of bottom part	14.00
AU12 - Total height	14.50
AU21 - Front pocket width	15.00

KI0385

Cooler bag with shoulder strap

Colours information

Nomad Brown Heather Greige

RVB :
Pantone C :
Pantone TCX :

RVB :
Pantone C :
Pantone TCX :

Logistic 1 60

Sizes	Width (cm)	Height (cm)	Length (cm)	Net weight (kg)	Gross weight (kg)	Pieces/Box	Pieces/Bundle
One Size	34.00	50.00	52.00	9	9.4	60	1