KI0384

Cooler bag with shoulder strap



100% polyester (Nomad Brown Heather). 65% polyester, 20% cotton, 10% viscose and 5% other fibres (Greige). Main fabric: 600D. Cooler bag with adjustable shoulder strap and top handle. Unlined front pocket for easy customisation. Can hold 500 ml bottles upright.

One Size | 190 g/m² | 8 l

Certifications

More information

Logistic

1 | 30

Country of origin

CN - China

Customs code

42029298

Nomad Brown Heather / Greige

Maintenance

KI0384

Cooler bag with shoulder strap

Dimensions (cm)

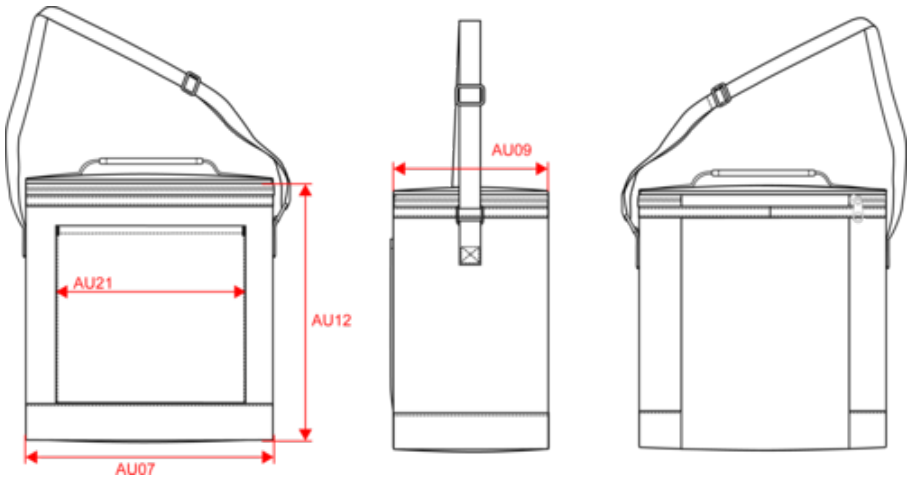

Measurements in cm	One Size
AU07 - Total width	21.00
AU09 - Depth of bottom part	15.00
AU12 - Total height	25.00
AU21 - Front pocket width	16.00

KI0384

Cooler bag with shoulder strap

Colours information



Nomad Brown Heather Greige

RVB :
Pantone C :
Pantone TCX :

RVB :
Pantone C :
Pantone TCX :

Logistic

 1  30

Sizes	Width (cm)	Height (cm)	Length (cm)	Net weight (kg)	Gross weight (kg)	Pieces/Box	Pieces/Bundle
One Size	34.00	32.00	52.00	6	6.3	30	1